Mechanical Dept.

Bachelor Of Engineering

Question Papers Nov-Dec 2019

Sem-III to VIII

Choice Based

SE (MECH) SEM III (CBGS) 14/11/19

(3hours) [Total marks: 80]

N.B. 1) Question No. 1 is compulsory.
2) Answer **any Three** from remaining
3) Figures to the right indicate full marks

1. a) Find Laplace transform of $f(t) = e^{-4t} \sin 3t . \cos 2t$. 5

b) Show that the set of functions $f(x) = 1, g(x) = x$ are orthogonal on $(-1,1)$. Determine the constants a and b such that the function $h(x) = -1 + ax + bx^2$ is orthogonal to both $f(x)$ and $g(x)$. 5

c) Evaluate $\int_c (z^2 - 2\bar{z} + 1)dz$ where C is the circle $|z| = 1$. 5

d) Compute the Spearman's Rank correlation coefficient ***R*** and Karl Pearson's correlation coefficient ***r*** from the following data, 5

x	12	17	22	27	32
y	113	119	117	115	121

2. a) Using Laplace transform, evaluate $\int_0^\infty e^{-t} \int_0^t \frac{\sin u}{u} du\, dt$. 6

b) Find an analytic function $f(z) = u + iv$, if 6

$$u = e^{-x}\{(x^2 - y^2)\cos y + 2xy \sin y\}.$$

c) Obtain Fourier series of $f(x) = x^2$ in $(0,2\pi)$. Hence, deduce that – 8

$$\frac{\pi^2}{12} = \frac{1}{1^2} - \frac{1}{2^2} + \frac{1}{3^2} - \frac{1}{4^2} + + \cdots$$

3. a) Using Bender –Schmidt method, solve $\frac{\partial^2 u}{\partial x^2} - \frac{\partial u}{\partial t} = 0$, subject to the conditions,

$u(0,t) = 0, u(4,t) = 0, u(x,0) = x^2(16 - x^2)$ taking $h = 1$, for 3 minutes. 6

b) Using convolution theorem, find the inverse Laplace transform of 6

$$F(s) = \frac{s^2 + s}{(s^2 + 1)(s^2 + 2s + 2)}$$

c) Using Residue theorem, evaluate

i) $\int_0^{2\pi} \frac{d\theta}{2 + \cos\theta}$ ii) $\int_C \frac{z^2}{(z+1)^2(z-2)} dz$, $C: |z| = 1.5$ 8

4. a) Solve by Crank –Nicholson simplified formula $\frac{\partial^2 u}{\partial x^2} - 16\frac{\partial u}{\partial t} = 0$, 6
$u(0,t) = 0,\ u(1,t) = 200t,\ u(x,0) = 0$ taking $h = 0.25$ for one-time step.

b) Obtain the Laurent series which represent the function

$f(z) = \frac{4z+3}{z(z-3)(z+2)}$ in the regions, i) $2 < |z| < 3$ ii) $|z| > 3$ 6

c) Solve $(D^2 - 3D + 2)y = 4e^{2t}$ with $y(0) = -3$ and $y'(0) = 5$ where $D \equiv \frac{d}{dt}$ 8

5. a) Find the bilinear transformation under which $1, i, -1$ from the z-plane are mapped onto $0, 1, \infty$ of w-plane. 6

b) Find the Laplace transform of
$f(t) = \begin{cases} t, & 0 < t < \pi \\ \pi - t, & \pi < t < 2\pi \end{cases}$ and $f(t + 2\pi) = f(t)$. 6

c) Obtain half range Fourier cosine series of $f(x) = x, 0 < x < 2$. Using Parseval's identity, deduce that – 8

$$\frac{\pi^4}{96} = \frac{1}{1^4} + \frac{1}{3^4} + \frac{1}{5^4} + \cdots$$

6. a) Using contour integration, evaluate: 6

$$\int_{-\infty}^{\infty} \frac{x^2 + x + 2}{x^4 + 10x^2 + 9} dx$$

b) Using least square method, fit a parabola, $y = a + bx + cx^2$ to the following data, 6

x	-2	-1	0	1	2
y	-3.150	-1.390	0.620	2.880	5.378

c) Determine the solution of one-dimensional heat equation $\frac{\partial u}{\partial t} = c^2 \frac{\partial^2 u}{\partial x^2}$ under the boundary conditions $u(0,t) = 0,\ u(l,t) = 0,\ u(x,0) = x, (0 < x < l), l$ being the length of the rod. 8

SE (III) (MECH) (choice based) 18/11/19

(3 Hours) [Total Marks : 80]

N. B. : (1) Question No. **1** is **compulsory**.
(2) Solve any **three** out of the remaining **five** questions.
(3) Assume suitable data if required and state it clearly.
(4) Use of Steam Table and Mollier diagram is permitted.

1. Attempt any **four** out of the following **20**

(a) State and prove Carnot Theorem.

(b) Explain the working principle of Roots blower. Also draw P-V diagram for it.

(c) What is the difference between heat and internal energy?

(d) Why is Carnot cycle not practicable for a steam power plant?

(e) Calculate the state of steam (i.e. whether it is dry, wet or superheated), when steam has a pressure of 15 bar and specific volume of 0.12 m^3/kg.

2. **(a)** In a gas turbine unit, the gases flow through the turbine is 15 kg/s and the power developed by the turbine is 12000 kW. The enthalpies of gases at the inlet and outlet are 1260 kJ/kg and 400 kJ/kg respectively, and the velocity of gases at the inlet and outlet are 50 m/s and 110 m/s respectively. Calculate : **10**
(i) The rate at which heat is rejected to the turbine, and
(ii) The area of the inlet pipe, given that the specific volume of the gases at the inlet is 0.45 m^3/kg.

(b) Show that the heat transfer through a finite temperature difference is irreversible. **5**

(c) A system at 500 K receives 7200 kJ/min from a source at 1000 K. The temperature of atmosphere is 300 K. Assuming that the temperatures of system and source remain constant during heat transfer find out : **5**
(i) The entropy produced during heat transfer ;
(ii) The decrease in available energy after heat transfer.

3. **(a)** Three reversible engines of Carnot type are operating in series between the limiting temperatures of 1100 K and 300 K. Determine the intermediate temperatures if the work output from engines is in proportion of 3 : 2 : 1. **10**

(b) Explain the principle of increase of entropy. **5**

(c) Derive the first and second T-dS equations. **5**

4. **(a)** In a thermal power plant operating on an ideal Rankine cycle, superheated steam produced at 5 MPa and 500^0C is fed to a turbine where it expands to the condenser pressure of 10 kPa. If the net power output of the plant is to be 20 MW, determine: i) heat added in boiler, in kJ/kg ii) the thermal efficiency. iii) the mass flow rate of steam in kg/sec. **10**

(b) Show that the efficiency of the Otto cycle depends only on the compression ratio. **5**

(c) Define volumetric efficiency of a compressor. On what factors does it depend? **5**

8B9F53D3223144C74BCE2CC990C3607E

5. (a) One kg of air at 1 bar and 300 K is compressed adiabatically till its pressure becomes 5 times the original pressure. Subsequently it is expanded at constant pressure and finally cooled at constant volume to return to its original state. Calculate the heat and work interactions and change in internal energy for each process and for the cycle. **10**

(b) State the Zeroth law of thermodynamics. What is it's significance? **5**

(c) Deduce the expression for available energy from a finite energy source at temperature T when the ambient temperature is T_o. **5**

6. (a) An oil engine takes in air at 1.01 bar, 20^0C and the maximum cycle pressure is 69 bar. The compression ratio is 18. Calculate the air standard thermal efficiency based on the dual combustion cycle. Assume that the heat added at constant volume is equal to the heat added at constant pressure. **10**

(b) A single stage, single acting air compressor running at 1000 rev/min delivers air at 25 bar. For this purpose the induction and free air conditions can be taken as 1.013 bar and 15^0C, and the FAD as 0.25 m^3/min. The clearance volume is 3% of the swept volume and the bore/stroke ratio is 1.2/1. Calculate: **10**

(i) the bore and stroke;
(ii) the volumetric efficiency;
(iii) the indicated power;
(iv) the isothermal efficiency;

Take the index of compression and re-expansion as 1.3.

8B9F53D3223144C74BCE2CC990C3607E

20/11/19

Evening

Paper / Subject Code: 51603 / Strength of Materials

B.E (Sem III) - MECH. CBCS

(3 Hours) **[Total Marks: 80]**

N.B. 1. Question No.1 is compulsory.
2. Answer any three questions from remaining questions.
3. Assume suitable data if required.
4. Figure to the right indicates full marks.

Q.1 Answer any four of the following. 20

a. Derive an expression for the strain energy due to suddenly applied load.

b. Derive the relation between load, shear force and bending moment.

c. Write the assumptions made in theory of pure torsion and derive torsional formula.

d. Draw shear stress distribution diagram for symmetry I section, T section and rectangular section.

e. Write the assumption for simple bending and derive the flexural formula.

f. Find the maximum power that can be transmitted through 50 mm diameter shaft at 150 rpm, if the maximum permissible shear stress is 80 N/ mm^2.

Q.2 a. A bar of brass 20 mm is enclosed in a steel tube of 40 mm external diameter and 20 mm internal diameter. The bar and the tubes are initially 1.2 m long and are rigidly fastened at both ends. If the temperature is raised by 60°C, find the stresses induced in the bar and tube. 10

Given: $E_s = 2 \times 10^5$ N/mm^2

$E_b = 1 \times 10^5$ N/mm^2

$\alpha_s = 11.6 \times 10^{-6}$/°C

$\alpha_b = 18.7 \times 10^{-6}$/°C.

b. The state of stress at a point in a strained material is as shown in Fig. Determine 10

(i) the direction of principal planes

(ii) the magnitude of principal stresses and

(iii) the magnitude of maximum shear stress.

Indicate the direction of all the above by a sketch.

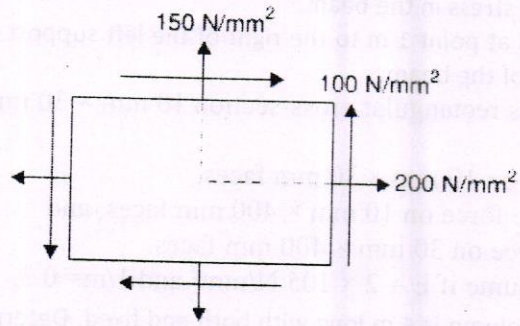

Q.3 a. Find slope at point A & B deflections at points C & D for a beam as shown in fig. Also find the maximum deflection. Take, E=200 GPa & I=10^8 mm^4 10

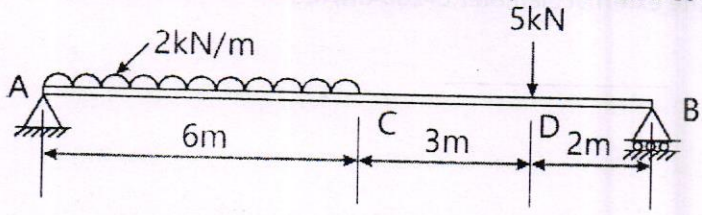

b. Draw SF and BM diagrams for the beam shown in figure. 10

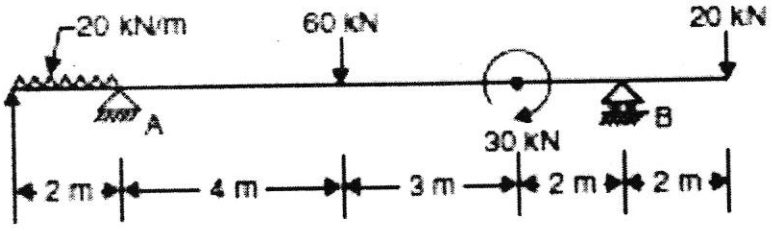

Q.4 a. A vertical column of rectangular section is subjected to a compressive load of P=800 KN as shown in fig. Find the stress intensities at the four comers of the column. 10

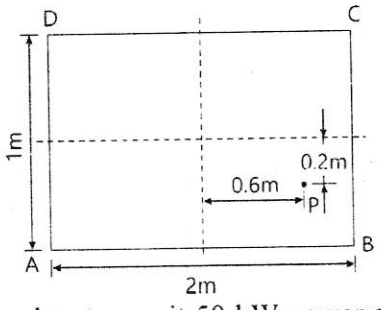

b. A propeller shaft is required to transmit 50 kW power at 500 rpm. It is a hollow shaft, having an inside diameter 0.6 times of outside diameter and permissible shear stress for shaft material is 90 N / mm^2. Calculate the inside and outside diameters of the shaft. 10

Q.5 a. A cylindrical shell is 3m long and 1.2m in diameter and 12mm thick is subjected to internal pressure of 1.8 N/mm^2 calculate change in dimensions and volume of shell. Take E=210 kN/mm^2 1/m=0.3 10

b. A simply supported beam of length 3 m and a cross section of 100 mm×200 mm carrying a UDL of 4 kN/m. find 10

1. Maximum bending stress in the beam.
2. Maximum shear stress in the beam.
3. The shear stress at point 1 m to the right of the left support and 25 mm below the top surface of the beam.

Q.6 a. A 400 mm long bar has rectangular cross-section 10 mm × 30 mm. This bar is subjected to 10

(i) 15 kN tensile force on 10 mm × 30 mm faces,
(ii) 80 kN compressive force on 10 mm × 400 mm faces, and
(iii) 180 kN tensile force on 30 mm × 400 mm faces.
Find the change in volume if E = 2 × 105 N/mm^2 and 1/m= 0.3.

b. A hallow cylindrical CI column is 4 m long with both end fixed. Determine the minimum diameter of the column, if it has to carry a safe load of 250 KN with a FOS of 5. Take internal diameter as 0.8 times the external diameter E=200 GN/m^2. 10

Paper / Subject Code: 51604 / Production Process -I

22/11/19.

B.E/ SEM III/ MECH/ Choice Base

Total Marks- 80 **Duration: 3 Hours**

N.B. 1) First Question (Q.1) is Compulsory.
2) Attempt any 3 questions from the remaining 5 (Q.2 - Q.6) questions.
3) Figures to the right indicate full marks
4) Proportionate and labelled free-hand sketches would do

Q. 1 a) Draw and discuss working of Explosive Welding technique with its applications, advantages and limitations. **10**

b) What's a pattern? How's it different from casting? Discuss various allowances on pattern and the material alternatives for pattern making. **10**

Q. 2 a) Draw and explain Geometry of a Single Point Cutting Tool. **10**

b) Explain working of Submerged Arc Welding with its applications, advantages and limitations. **10**

Q. 3 a) Discuss physics of electric welding arc with the help of diagrams. **10**

b) Explain the working principle of resistance spot welding process with the help of diagrams. **10**

Q. 4 a) Explain the imposition of directional solidification in sand casting. **10**

b) Draw and explain significance of various elements of gating system in sand casting. **10**

Q. 5 a) Draw and explain working of screw injection moulding of polymers with its applications, advantages and limitations. **10**

b) Draw and explain various operations possible on Centre Lathe. **10**

Q. 6 Write short notes on (Any four) **20**

a) Various soldering techniques.

b) Pressurized and Non-pressurized gating system in founding practice.

c) Electron Beam Welding.

d) Reaction moulding of polymers.

e) Classification of manufacturing processes.

f) Quick return mechanism on shaper.

163A4613477425A40D689338447517AA

26-11-2019

SE / Mech / choice based / Sem - III

Time: 3 hours **Marks [80]**

NB: 1. **Q.1 is compulsory**
2. Solve any **three** from the remaining .
3. All questions carry equal marks

Q.1 Answer any **four**: **20**

1. Define composite and discuss its classification.
2. Discuss the differences and similarities between slip and twinning.
3. Why FCC metals are in general more ductile than BCC and HCP metals?
4. What are MR fluids? Where are they used?
5. What are limitations of Plain carbon steel? Explain the alloying effect on phase transformations.

Q.2

1. Define critical cooling rate. Describe various cooling curves on TTT diagram. How such curves are drawn? What factors affect critical cooling rate? **10**
2. What is strain hardening? Explain the phenomenon on the basis of dislocation theory. Also discuss role of Frank reed source in strain hardening. **10**

Q.3

1. What is fatigue of metals? Explain the method of testing the metals for fatigue. Draw and discuss the S-N diagram. **10**
2. Define creep. Draw the creep curve and explain the stages of creep. Discuss the development of creep resisting materials. **10**

Q.4

1. Draw Fe-Fe_3C equilibrium diagram and label the temperatures, composition and phases. **10**
2. Describe the cooling of the 0.4%C steel from liquid state to room temperature. Calculate the phases in this steel obtained at room temperature. **10**

Q.5

1) Define hot and cold working. Compare the two processes giving a few examples for each. **10**
2) What is Hardenability? What are factors affecting hardenability? Explain Jominy End Quench test. **10**

Q.6 Answer any **four-** **20**

1) Discuss the importance of heat treatments.
2) A slowly cooled steel contains 40% ferrite and 60% pearlite at room temperature. Determine the amount of total ferrite and cementite present in the alloy.
3) Discuss the Rule of mixtures and its use.
4) What are smart materials? Discuss a few of them giving applications for the same.
5) Discuss with a neat diagram any one method used for nanomaterial synthesis.

D1F9F7C36E6E62DC420FF76DB7807B96

4/12/2019

SE(Mech) sem-IV| choice Based

[Time: 3 Hours] **[Marks:80]**

Please check whether you have got the right question paper.

N.B:
1. **Question no. 1 is compulsory.**
2. Answer **any three** from **remaining.**
3. **Figures** to the right **indicate** full **marks.**
4. **Use** of statistical **tables** is **allowed.**

Q.1 a) Find eigen values of A^3-2A^2+I and adj A **(05)**

where $A = \begin{bmatrix} 4 & 1 & -1 \\ 6 & 3 & -5 \\ 6 & 2 & -2 \end{bmatrix}$.

Q.1 b) A random variable X has the following probability function. **(05)**

X	0	1	2	3	4
P(X = x)	$\frac{1}{16}$	4K	6K	4K	K

Find (i) K (ii) $P(X < 4)$ (iii) $P(X > 3)$ (iv) $P(0 < X \leq 2)$

Q.1 c) Can it be concluded that the average life-span of an Indian is more than 71 years, if a random sample of 900 Indians has an average life span 72.8 years with standard deviation of 7.2 years? **(05)**

Q.1 d) Consider the following problem: **(05)**

Maximize $Z = 2x_1-2x_2+4x_3-5x_4$

Subject to $x_1 + 4x_2 - 2x_3 + 8x_4 = 2$,

$-x_1 + 2x_2 + 3x_3 + 4x_4 = 1$,

$x_1, x_2, x_3, x_4 \geq 0$

Find a basic feasible solution which is non-degerate and optimal solution.

Q.2 a) Check whether the given matrix A is diagonalizable, diagonalize if it is, **(06)**

Where $A = \begin{bmatrix} 8 & 4 & 3 \\ -8 & -3 & -4 \\ -2 & -2 & 1 \end{bmatrix}$

Q.2 b) Verify Green's theorem for $\vec{F} = x^2 i - xyj$ where C is the triangle having vertices A(0,3), B(3,0), C(6,3). **(06)**

Q.2 c) Sample of two types of electric bulbs were tested for length of life and the following data were obtained, **(08)**

	Type I	Type II
Sample size	10	9
Mean of the sample (in hours)	1136	1034
Standard deviation (in hours)	36	39

Test at 5% level of significance whether the difference in the sample means is significant.

Q.3 a) Use the dual simplex method to solve the following LPP. **(06)**

Minimise $Z = 6x_1 - x_2$

Subject to $2x_1 + x_2 \geq 3$,

$x_1 - x_2 \geq 0$,

$x_1, x_2 \geq 0$.

Q.3 b) Use Gauss Divergence Theorem to evaluate $\iint_S \bar{N}.\bar{F}\, ds$ where $\bar{F} = 2xi + 2yj + 2z^2k$ and S is the closed surface bounded by the cone $x^2 + y^2 = z^2$ and the plane $z = 1$. **(06)**

Q.3 c) Find the rank, index, signature and class of the following Quadratic form by reducing it to its canonical form. **(08)**

$2x^2-2y^2+2z^2-2xy-2yz+6zx$.

Q.4 a) Four dice were thrown 250 times and the number of appearance of 6 each time was noted. **(06)**

No. of successes (x):	0	1	2	3	4
Frequency (f):	133	69	34	11	3

Fit a poisson distribution and find the expected frequencies for x = 0, 1, 2, 3, 4.

Q.4 b) Verify Cayley Hamilton theorem for matrix A and hence find the matrix represented by **(06)**

$A^5-4A^4-7A^3+11A^2-A-11I$

Where $A = \begin{bmatrix} 3 & -2 & 3 \\ 10 & -3 & 5 \\ 5 & -4 & 7 \end{bmatrix}$

Q.4 c) An investigation into the equality of standard deviation of two normal populations gave the following results. **(08)**

Sample	Size	Sample mean	Sum of squares of deviations from the mean
1	13	18	105
2	21	24	145

Examine the equality of sample variances at 5% level of significance.
(Given: $F_{0.025} = 2.68$ for d. o. f 12 and 20 and $F_{0.025} = 3.07$ for d. o. f 20 and 12)

Q.5 a) Is matrix $A = \begin{bmatrix} 2 & 0 & 0 \\ -3 & 3 & -1 \\ 3 & -1 & 3 \end{bmatrix}$ Derogatory matrix? Find its minimal polynomial. **(06)**

Q.5 b) A vector field $\bar{F}$ is given by **(06)**
$\bar{F} = (y \sin z - \sin x)i + (x \sin z + 2yz)i + (xy \cos z + y^2)k$
Prove that $\bar{F}$ is irrotational. Hence find its scalar potential function φ if $\varphi(\pi, l, o)$.

Q.5 c) The following table gives the result of opinion pole for three vehicles A, B, C. Test whether the age and the choice of the vehicle are independent at 5% level of significance using χ^2 – test. **(08)**

Age	Vehicle			Total
	A	B	C	
20-35	25	40	35	100
35-50	35	24	41	100
Above 50	40	36	24	100
Total	100	100	100	300

Q.6 a) State stoke's theorem and evaluate $\int [(x^2 + y^2)i + (x^2 - y^2)j].d\bar{r}$ **(06)**
Where C is the square in the xy-plane with vertices (1,0), (0,1), (-1,0) and (0,-1)

Q.6 b) Monthly salary X in an organisation is normally distributed with mean Rs. 3000 and standard deviation of Rs. 250. What should be the normally minimum salary of an employee in this organisation so that the probability that an employee to top 5% employees? **(06)**

Q.6 c) Using duality solve the following LPP, **(08)**
Maximize $Z = 3x_1 + 2x_2$
Subject to $2x_1 + x_2 \leq 5$
$x_1 + x_2 \leq 3$
$x_1, x_2 \geq 0.$

****

9/12/2019

SE(Mech) Sem-IV/ Choice based

(3 Hours) **Total Marks: 80**

N.B. : (1) Question No.1 is Compulsory.
(2) Attempt any three Questions out of remaining five questions.
(3) Figures to the right indicate full marks.
(4) Assume any suitable data if necessary and justify the same.

Q1 Solve any Five 20

a) What is the effect of temperature on viscosity of water and that of air 4

b) The weight of a block of dimensions 1.2m X 1m X 1.8 m in water is 2542.8N. Find its weight in air. 4

c) If the velocity field is given by $u = x^2 - y^2$ and $v = -(2xy)$, Check whether 4

i) flow is possible or not ii) rotational or irrotational.

d) The velocity profile within boundary layer for steady, two-dimensional, incompressible, laminar flow over a flat is given by $\frac{u}{U_\infty} = A + B\left(\frac{y}{\delta}\right)$ Using suitable boundary condition, evaluate the constants A and B. 4

e) Explain losses of energy in the flow through pipe. 4

f) State the Bernoulli's Theorem. List out the assumptions and limitations of Bernoulli's equation. 4

Q2 a) The water in a 25 m deep reservoir is kept inside by a 150 m wide wall whose cross section is an equilateral triangle as shown in fig.1. Determine the total force acting on the inner surface of the wall and its line of action. 06

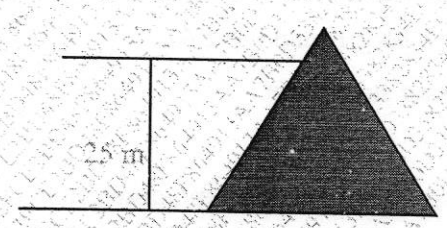

b) The stream function in a two- dimensional, incompressible flow field is given by $\psi = (x^3 - 3xy^2)$. Find the velocity at a point (1, 2) and the velocity potential function. 10

c) Water flows through a 300 mm x 150 mm Venturimeter at a rate of 0.065 m^3/s and the differential gauge is deflected 1.2 m. Specific gravity of the manometric fluid is 1.6. Determine the coefficient of discharge of the Venturimeter. 04

Q3 a) Water is flowing through a horizontal pipe of 15 cm diameter and of length 30 m. While one end of the pipe is connected to a tank, the other end is open to the atmosphere. If the height of water in the tank is 5 m above the centre of pipe, determine the rate of flow of water through the pipe. Take f = 0.03 10

b) A 45° reducing pipe-bend in a horizontal plane has an inlet diameter OD 300mm and outlet diameter of 150 mm. The pressure at outlet is 20 kPa gauge and rate of flow of water through bend is $0.09 m^3/s$. Neglecting friction, determine the magnitude and direction of force required to keep the bend in position. Neglect the weight of the water in the bend. 10

Q4 a) Derive an expression for the area velocity relationship for a compressible fluid flow in the form $\frac{dA}{A} = -\frac{dV}{V}(1 - M^2)$. Explain properly, with the help of diagrams, what are the important conclusions derived from the above relationship. 10

b) The local velocity u in a laminar, incompressible flow over a flat plate is given by $\frac{u}{U_\infty} = 2\left(\frac{y}{\delta}\right) - 2\left(\frac{y}{\delta}\right)^3 + \left(\frac{y}{\delta}\right)^4$ where y is perpendicular distance from the plate, δ is the boundary layer thickness and U_∞ is the free stream velocity. Obtain the expression for the displacement thickness and momentum thickness. 10

Q5 a) An aeroplane is flying at 900 km/hr through still air having a pressure of 80 kN/m^2 and temperature of – 8°C. Find the Mach number. Also find stagnation properties on the nose of the plane. Take R = 287 J/Kg°K and k = 1.4 . 10

b) Derive Euler's equation of motion along streamline 10

Q6 a) Explain what is meant by separation of boundary layer and describe in detail the methods to control this? 06

b) State Reynold's Transport theorem and explain each term in detail. 04

c) An oil with density 850 kg/m^3 and viscosity 0.16 Ns/m^2 flows through a 20 cm diameter pipe at a rate of 1.2 lit/sec. If the length of the pipe is 500 m, find the pressure drop between the two ends of the pipe. Also calculate the shear stress at the pipe wall. 10

SE MECH SEM IV CHOICE BASED 11/12/2019

[3 Hours] [Marks: 80]

Please check whether you have got the right question paper.

N.B:
1. Question No. 1 is compulsory.
2. Solve any three questions out of remaining three questions.
3. Figures to the right indicate full marks.

1.	(a)	Draw and explain V-I characteristics of SCR.	05
	(b)	Draw and explain equivalent circuit of an OP-AMP.	05
	(c)	State and prove Demorgan's Theorems.	05
	(d)	Enlist all important features of logic family circuit.	05
2.	(a)	Draw and explain slip-torque characteristics of AC motor.	07
	(b)	What is GTO? Explain switching characteristics of GTO.	07
	(c)	Compare DIAC and TRAIC.	06
3.	(a)	Draw and explain full controlled rectifier with R load. Draw waveforms.	07
	(b)	Explain with neat diagram MSP 430 architecture.	07
	(c)	Draw and explain second order low pars filter.	06
4.	(a)	Draw circuit diagram and waveforms of single phase full bridge inverter with R load.	07
	(b)	Compare CMOS logic family with TTL logic family.	07
	(c)	What is servo speed? Explain working principle of servo motor.	06
5.	(a)	Derive the relation per voltage gain in inverting mode in operational amplifier and compare it with non inverting mode.	07
	(b)	Draw and explain R triggering method of SCR.	07
	(c)	Draw and explain astable mode of operation of IC 555.	06
6.	(a)	Explain the application of piezo-electric activator drive.	07
	(b)	Compare DC series motor and DC shunt motor.	07
	(c)	Explain different applications of microcontroller.	06

2337C0CD50FE594F32A7EB635DDF784D

S.E. (Mechanical) Sem-IV Choice Base 13/12/2019

(3 Hours) [Total Marks : 80]

Please check whether you have got the right question paper.

N.B.:
1) **Question No 1. is compulsory.**
2) **All questions carry equal marks.**
3) **Attempt any 3 out of the remaining 5 questions.**

1. Attempt **any four** **(20)**

a) Describe one RP process with a neat sketch.
b) Describe the factors affecting MRR in AJM.
c) What is meant by dressing, trueing and balancing of grinding wheel.
d) Describe features and mechanism of a compound die.
e) What are the conditions under which different types of chips are formed in metal cutting?

2. a) What are the factors determining MRR in EBM? **(10)**
b) Describe chip formation in orthogonal cutting process. **(10)**

3. a) Describe the process of finding center of pressure **(10)**
b) State the principles of location w.r.t. Jigs and Fixtures. **(10)**

4. a) What is the nomenclature for expressing the cutting tool signature in MRS. Draw a sketch also. **(10)**
b) Describe the process of photo-polymerization with a neat labelled sketch. **(10)**

5. a) In an orthogonal cutting operation, the rake angle is 5^0, chip thickness before the cut = 0.2mm and width of cut = 4mm. The chip thickness ratio is 0.4. **(10)**
i. Determine the chip thickness after the cut.
ii. Determine shear angle
iii. Determine friction angle
iv. Determine co-efficient of friction
v. Determine shear strain

b) Determine the parentage change in cutting speed required to give 50% reduction in tool life. Take n = 0.2 **(10)**

6. Attempt all of the following **(20)**

a) Draw a neat labelled sketch of a typical twist drill.
b) Differentiate between Transferred and non-transferred plasma arc machining process.
c) Describe the dynamometer used in Milling Machine.
d) Classify various locators used in Jigs and Fixtures.
e) How does a welding fixture differ from a machining fixture?

17/12/2019

Paper / Subject Code: 41205 / Kinematics of Machinery

S E (Mech) sem-IV Choice Based Dec-2019

03 Hrs **[Total Marks 80]**

N.B.:

(1) **Question No.1 is compulsory**
(2) Attempt any **three** questions out of remaining **five** questions
(3) Figures to right indicate full marks
(4) Assume suitable data if **necessary**.
(5) Notations carry usual meaning.

Q.1 **Attempt any four**

A. What is Kutzback's criterion for degrees of freedom of plane mechanism? In what way is Gruebler's criterion different from it?. 20

B. Differentiate between lower pair and higher pair.

C. Define with respect to cam i) Base circle ii) pitch circle iii) trace point iv) pressure angle.

D. What is crowning of pulley in flat drives? What is its use.

E. Explain the self locking and self energizing in brakes.

Q.2A. The mechanism, as shown in Fig.1, has the dimensions of various links as follows : AB = DE = 150 mm ; BC = CD = 450 mm ; EF = 375 mm. The crank AB makes an angle of 45° with the horizontal and rotates about A in the clockwise direction at a uniform speed of 120 r.p.m. The lever DC oscillates about the fixed point D, which is connected to AB by the coupler BC. The block F moves in the horizontal guides, being driven by the link EF. Determine velocity of the block F and angular velocity of DC 14

1. By instantaneous centre method
2. By relative velocity method

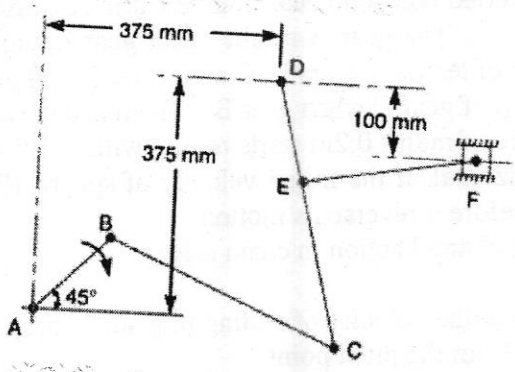

Figure 1

B. State and prove law of gearing. 06

Q.3A. A pair of gears, having 40 and 20 teeth respectively, are rotating in mesh, the speed of the smaller being 2000 r.p.m. Determine the velocity of sliding between the gear teeth faces at the point of engagement, at the pitch point, and at the point of disengagement if the smaller gear is the driver. Assume that the gear teeth are 20° involute form, addendum length is 5 mm and the module is 5 mm. Also find the angle through which the pinion turns while any pairs of teeth are in contact. 10

B. An open belt drive is required to transmit 10KW of power from a motor running at 600rpm. Diameter of the driving pulley is 250mm. The speed of the driven pulley is 220rpm. The belt is 12mm thick and has a mass density of $0.001 g/mm^3$. Safe stress in the belt is not to exceed $2.5 N/mm^2$. The two shafts are 1.25 m apart. The coefficient of friction is 0.25. Determine the width of the belt. 10

Q.4 A. The mechanism as shown in fig. 2 of a radial valve gear. The crank OA turns uniformly at 150 r.p.m and is pinned at A to rod AB. The point C in the rod is guided in the circular path with D as centre and DC as radius. The dimensions of various links are: OA = 150 mm ; AB = 550 mm ; AC = 450 mm ; DC = 500 mm ; BE = 350 mm. Determine velocity and acceleration of the ram E for the given position of the mechanism. 14

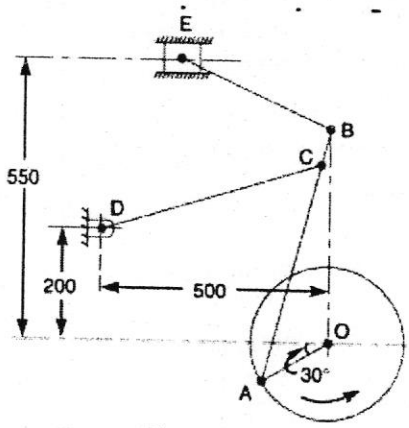

Figure 2

B. What is pantograph? Show that it can produce paths exactly similar to the ones traced out by a point on a link on an enlarged or reduced scale. 06

Q.5A. In a reverted epicyclic gear train, the arm A carries two gears B and C and a compound gear D - E. The gear B meshes with gear E and the gear C meshes with gear D. The number of teeth on gears B, C and D are 75, 30 and 90 respectively. Find the speed and direction of gear C when gear B is fixed and the arm A makes 100 r.p.m. clockwise 08

B. A sphere of radius 0.2m starts rolling without slip up an inclined at an angle of 30^0 with the horizontal. If the initial velocity of sphere 10rad/s. Determine how far sphere will travel before it reverse its motion. 06

C. Explain chordal action in chain drive. 06

Q.6A. Prove that the velocity of sliding in gears is proportional to the distance of the point of contact from the pitch point . 08

B. A cam is rotating at 800 rpm operate a reciprocating knife edge follower. The least radius of cam is 30mm , stroke of follower is 30mm. Ascent takes place by uniform acclereation and deceleration and descent by simple harmonic motion. Ascent take place by 120^0 and descent during 90^0 of cam rotation. Dwell between ascent and descent 30^0. Sketch displacement, velocity and acceleration. 12

15/11/2019

TE/MECH/SEM V/CBCS/

Time : 3 Hrs **Marks : 80**

Note: 1 Q.No.1 is **compulsory.**
2. Attempt any **Three** question from Q.No.2 to Q.No.6
3. Make suitable assumptions if required

Q.No.1 Solve Any **Four** **(5*4)**

a) Define the following terms.
i) Stroke ii) C.R. iii) TDC iv) Clearance Volume v) Displacement Volume.

b) List the types of combustion chamber for S. I. Engine and illustrate any one.

c) Classify the diesel injection system and illustrate any one.

d) State advantages and Disadvantages of HCCI Engine

e) List five reasons why there are HC emissions in the exhaust of an automobile.

Q.No.2 **a)** State the reasons for efficiency of actual cycle is much lower than the air standard cycle efficiency? List the major losses and differences in actual engine cycle and air standard cycle. **(10)**

b) A single cylinder engine operating at 2000 rpm develops a torque of 8 N-m. The indicated power of the engine is 2.0 kW. Determine loss due to friction as the percentage of brake power. **(05)**

c) Why does the optimum ignition timing change with engine-operating conditions? State the advantages of electronic ignition **(05)**

Q.No.3 **a)** Illustrate the phenomenon of knocking in S.I. engines with the help of P-Θ and P - V plots. State harmful effect of knocking. **(10)**

b) Evaluate the air-fuel ratio of a 4-stroke, single cylinder, air cooled engine with fuel consumption time for 10 cc as 20.0 sec. and air consumption time for 0.1 m^3 as 16.3 sec. The load is 16 kg at speed of 3000 rpm. Also evaluate brake specific fuel consumption in g/kWh and brake thermal efficiency. Assume the density of air as 1.175 kg/m^3 and specific gravity of fuel to be 0.7. The lower heating value of fuel is 44 MJ/kg and the dynamometer constant is 5000. **(10)**

Q.No.4 **a)** Describe the Engine Pollution, list the methods to control pollution and state the EURO and BHARAT norms. **(10)**

b) A four-cylinder, four-stroke diesel engine develops a power of 180 kW at 1500 rpm. The *b.s.f.c.* is 0.2 kg/kWh. At the beginning of injection pressure is 30 bar and the maximum cylinder pressure is 50 bar. The injection is expected to be at 200 bar and maximum pressure at the injector is set to be about 500 bar. **(10)**

Determine the total orifice area required per injector if the injection takes place over 15^0 crank angles.

Use following assumptions:

C_d for injector = 0.7 , *S.G.* for fuel = 0.875 , Atmospheric pressure = 1 bar,

Effective pressure difference = Average pressure difference over the injection period.

Q.No.5 **a)** List Exhaust Gas Oxygen sensors and state their importance in ECM **(06)**

b) An air compressor is being run by the entire output of a supercharged 4-stroke cycle diesel engine. Air enters the compressor at 25°C and is passed on to a Cooler where 1210 kJ per mm is rejected. The air leaves the cooler at 65°C and 1.75 bar. Part of this air-flow is used to supercharge the engine which has a volumetric efficiency of 72% based on induction manifold condition of 65°C and 1.75 bar. The engine, which has six cylinders of 100 mm. bore and 110 mm stroke runs at 2000 rpm and delivers an output torque of 150 Nm. The mechanical efficiency of engine is 80%. Evaluate:— **(14)**

(i) The indicated mean effective pressure of the engine;

(ii) The air consumption rate of the engine;

(iii) The air-flow into compressor in kg per min.

Q.No.6 **a)** State the necessity of engine cooling and disadvantages of overcooling **(05)**

b) The following readings were recorded during a trial on a single cylinder, 2-stroke Diesel Engine. **(15)**

Power supplied by electric motor for motoring at rated speed = 1.5 kW;

Rated speed = 500 rpm; Net load on brake = 225 N; Diameter of brake wheel = 100 cm; Rate of cooling water through engine jacket = 13.65 kg/min; Rise in temperature of cooling water = 10°C; Fuel consumption = 2 kg/h; C.V. of fuel used = 43000 kJ/kg; A:F ratio = 32:1; C_{ps} (gases) = 1.006 kJ/kg°C; Exhaust gas temperature = 345°C; Ambient temperature = 25°C and Ambient pressure = 1bar; Take L = D = 30 mm Determine:

(i) Mechanical Efficiency (ii) Thermal efficiency

(iii) Brake specific fuel consumption (iv) Brake mean effective pressure

Draw the heat balance sheet on percentage basis.

****

979B3B8DC5D9603B1FF8DD6A3AE19F03

TE (V) (Mech.) (CBCS) 19/11/19

(3 Hours) [Total marks: 80]

Instructions:
1. **Question 1 compulsory**.
2. Attempt any **three** questions from the remaining **five** questions.
3. Assume suitable data, **if necessary**.
4. **Figures/sketches** carry weightage.

Q1) a) Consider the characteristic equation $s^4 + 2s^3 + (4+k)s^2 + 9s + 25 = 0$, using the Hurwitz stability criterion, determine the range of "k" for stability. 08

b) Differentiate between open loop and closed loop system with examples. 06

c) Explain the following terms with respect to the measuring system:
i) Span and Range ii) Drift and Threshold 06

Q2) a) Explain the construction and working of a Nozzle Flapper with a neat sketch 08

b) Illustrate the working principle of Optical Encoder with a neat sketch 08

c) Illustrate the terms state variables and state space with reference to state space modelling of a control system. 04

Q3) a) Explain the constructional features and working of a "Ionization Gauge" for pressure measurement. 08

b) A McLeod Gauge has volume of bulb and measuring capillary $V = 100 \times 10^{-6}\ m^3$ and measuring capillary diameter of 1 mm. Calculate the pressure indicated when the reading of the measuring capillary is 30 mm in case approximate formula is used. What is the error if the exact formula is used for measurement of pressure? 06

c) Illustrate the working of Ultrasonic flow meters. 06

Q.4 a) Illustrate the constructional features and working of LVDT with a neat sketch 07

b) Determine the values, of "K" and "k" of the closed-loop system shown in figure so that the maximum overshoot in unit-step response is 25% and the peak time is 2 sec. Assume that $J = 1\ kg\text{-}m^2$. 08

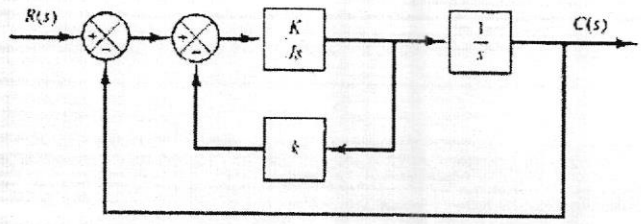

c) A system is described by $\frac{d^2y}{dt^2} + 10\frac{dy}{dt} + 30\,y(t) = 60\,x(t)$, find the natural frequency and damping ratio. 05

2FC8B81F0F26A74E5132017E089C6FF3

Q.5 a) For a system with unity feedback having , $G(s) = \dfrac{800\,(s+2)}{s^2\,(s+10)s+40)}$ 10

Sketch Bode plot and determine G.M., P.M and comment on stability.

b) A unity feedback system is represented by the equation $G(S)=\dfrac{20\,(S+3)}{S(S+1)(S+4)}$, find (i) type of the system (ii) static error co-efficients and steady state error for ramp input of magnitude "5". 10

Q6) a) Reduce the given block diagram to its canonical form and hence obtain its equivalent transfer function, for the block diagram shown below. 10

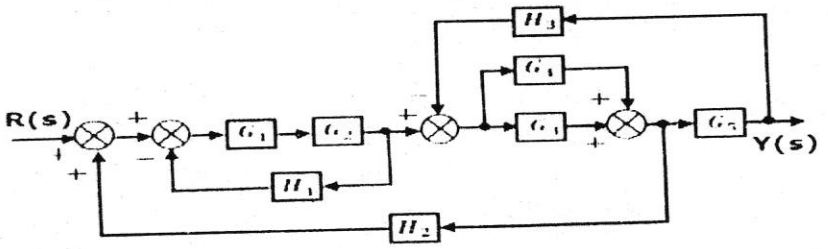

b) Obtain the state-space equation and output equation for the system defined by the equation 10

$$\frac{Y(s)}{U(s)} = \frac{2s^3 + s^2 + s + 2}{s^3 + 4s^2 + 5s + 2}$$

****

21/11/19.

T.E/MECH/SEM V/CBCGS

(3 Hours) [Total Marks : 80]

N.B.: 1) Question No. 1 is compulsory.
2) Attempt any THREE from question no. 2 to 6.
3) Use illustrative diagrams wherever possible.

Q1) Solve any **Four :** **20**

a) What do you mean by Fouling in heat exchanger?

b) Differentiate between drop wise and film wise condensation.

c) Define thermal resistance, thermal conductance, thermal conductivity and thermal contact resistance.

d) Define shape factor and state its physical significance.

e) Explain hydrodynamic and thermal boundary layer.

Q2) a) Derive 3 dimensional conduction equation in Cartesian co-ordinates for a homogeneous material, steady state conditions and without heat generation. **10**

b) A 100 mm diameter steam pipe is covered by two layers of lagging. The inside layer is 40 mm thick and has a thermal conductivity of 0.07 W/m K. The outside layer is 25 mm thick and has a thermal conductivity of 0.1 W/m K. The pipe carries steam at a pressure of 1.7 MN/m^2 with 230 ^0C temperature. The outside temperature of lagging is 24 ^0C. If the steam pipe is 20 m long, determine (a) The heat lost per hour, (b) The interface temperature of lagging. **06**

Neglect the resistance of the steam pipe.

c) Write a short note on 'Importance of numerical methods.' **04**

Q3) a) Derive expression for temperature distribution and heat dissipation in a straight fin of rectangular profile for infinitely long fin. **08**

b) 3000 kg of water is heated per hour from 30 to 70 ^0C by pumping it through a certain heated section of a 25 mm diameter tube. If the surface of the heated section is maintained at 110 ^0C, estimate length of the heated section and the rate of heat transfer from the tube to water. **08**

The thermo-physical properties of water are: ρ = 971.6 kg/m^3; $\mu = 0.355 \times 10^{-3}$ kg/m-s; k = 0.667 W/m-deg; Cp = 4195 J/kg-deg.

Use $Nu = 0.023 (Re)^{0.8} (pr)^{0.4}$.

c) What is meant by critical thickness of insulation? Explain its significance. **04**

Q4) a) With the help of Buckingham π theorem show that for a forced convection $Nu = C\,(Re)^m\,(Pr)^n$ **08**

b) A steel rod (k = 32 W/m K), 12 mm in diameter and 60 mm long with an insulated end is to be used as a spine. It is exposed to surrounding with a temperature of 60^0C and heat transfer coefficient of 55 W/m^2 K. The temperature at the base of fin is 95^0C. Determine (i) The fin efficiency, (ii) The temperature at the end of the spine, (iii) The heat dissipation. **08**

c) What are the assumptions for lumped capacity analysis? **04**

Q5) a) Derive the relationship between the effectiveness and the number of transfer units for a parallel flow heat exchanger. **10**

b) A sphere of 20 cm diameter made of cast iron initially at uniform temperature of 400^0C is quenched into oil. The oil bath temperature is 40^0C. If the temperature of the sphere is 100^0C after 5 min, find heat transfer coefficient on the surface of the sphere. Take Cp (C. I.) = 320 J/kg K, ρ (C. I.) = 7000 kg/m^3. **06**

Use lumped parameter analysis.

c) For a hemispherical furnace, the flat floor is at 700 K and has an emissivity of 0.5. The hemispherical roof is at 1000 K and has emissivity of 0.25. Find net radiative heat transfer from floor to roof. **04**

Q6) a) State and explain Stefan Boltzman law and Kirchhoff's law. **04**

b) The radiative shape factor of the circular surface of thin hollow cylinder of 10 cm diameter and 10 cm length is 0.1716. What is the shape factor of the curved surface of the cylinder with respect to itself? **04**

c) Draw the boiling curve of water and identify the different boiling regimes. **04**

d) Water (C_p = 4200 J/kg °C) enters a counter flow heat exchanger at 38°C flowing at 0.076 kg/s. It is heated by oil (C_p = 1800 J/kg °C) flowing at the rate of 0.152 kg/s from an inlet temperature of 116°C. For an area of 1 m^2 and U = 340 W/m^2°C, determine the total heat transfer rate. **08**

T.E/SEM V/ Choice Base / MECH 25/11/19

Duration: 3Hrs

Marks:80

Instructions:

i) **Question No.1 is compulsory**
ii) **Solve any three questions from the remaining**
iii) **Assume suitable data wherever necessary**
iv) **Figure to the right indicates marks.**

Q.1 Solve **any four** questions from following

a) Explain controlling force diagram of governor? **(05)**

b) Derive an expression for effect of gyroscopic couple on a naval ship during pitching. **(05)**

c) Explain why mechanical vibration is an important area of study for engineers. Briefly describe five practical examples of good vibration. **(05)**

d) Draw and explain a plot of magnification factor versus frequency ratio curves for various damping factor values. **(05)**

e) Explain static and dynamic balancing. **(05)**

Q.2 a) The inertia of the connecting rod can be replaced by two masses concentrated at two points and connected rigidly together. How to determine the two masses so that it is dynamically equivalent to the connecting rod? **(10)**

b) Find the natural frequency of the pulley system shown in figure1 by neglecting friction and masses of pulleys **(10)**

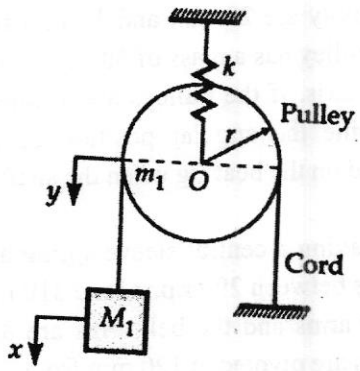

Figure1

Q.3 a) Explain the various types of instrumentation system for condition monitoring. **(10)**

b) The disc of torsional pendulum has moment of inertia 600 kg-cm2 and is immersed in a viscous fluid. The brass shaft attached to it is of 10cm diameter and 40cm long. When the pendulum is vibrating, the observed amplitudes on the same side of the rest position for successive cycles are 90, 60 and 40. Determine a) logarithmic decrement b) damping torque at unit velocity c) time period. Assuming for brass G=4.4×1010 N/m2. **(10)**

Q.4 a) A vertical petrol engine 100 mm diameter and 120 mm stroke has a connecting rod 250 mm long. The mass of the piston is 1.1 Kg. The speed is 2000 r.p.m. On the expansion stroke with a crank 20^0 from top dead centre, the gas pressure is 700 KN/mm^2. Determine net force on the piston, resultant load on the gudgeon pin, thrust on the cylinder wall, speed above which other things remain same, the gudgeon pin load would be reverse in direction. **(10)**

b) A machine of mass 50 Kg operates at 1200 r.p.m. Find the maximum stiffness of an isolator that provides 75 percent isolation. Assume that damping ration of the isolator 7 percent. **(10)**

Q.5 a) Derive the equation for critical speed of a light shaft with a single disk without damping. **(10)**

b) A vehicle moves over a road surface having approximately the sinusoidal profile with a wavelength of 10 m and amplitude of 80 mm. The vehicle is moving with a velocity of 55 km/hr. Calculate the critical speed of the vehicle. If the amplitude of vibration is 25 mm and mass of vehicle is 500 kg. **(10)**

Q.6 a) A shaft supported between bearings 2 m apart and extended 0.5 m beyond bearing at each end. The shaft carries three pulleys one at each end and one at the middle of its length. The masses of end pulleys are 50 kg and 25 kg and there centre of gravity are 20 mm and 15 mm respectively from the shaft axis. The centre pulley has a mass of 60 kg and it's cetre of gravity is 20 mm from the shaft axis. If the pulleys are arranged so as to give the static balance, determine the angular position of the pulleys and the dynamic force produced on the bearing when the shaft rotates at 340 r.p.m. **(10)**

b) A Hartnell governor having a central sleeve spring and two right angled bell crank levers moves between 290 r.p.m. and 310 r.p.m. for a sleeve lift of 15 mm. The sleeve arms and the bell arms are 80 mm and 120 mm respectively. The levers are pivoted at 120 mm from the governor axis and the mass of each ball is 2.5 kg. The ball arms are parallel to the governor axis at the lowest equilibrium speed. Determine loads on the spring at the lowest and the highest equilibrium speed and stiffness of the spring. **(10)**

****

27-11-2019

T.E. / Mechanical / choice based / Sem – V

Duration -3 hours **Marks -80**

N.B.

(1) Question **No.1** is **compulsory** and **Answer 3** Questions out of **remaining 5** Questions.
(2) Assume suitable **data** wherever **necessary**
(3) **Figurers** to the **right** indicate full **marks**.

Q.1 a) Give reasons for **any five** of the following statements. **15**

i) Grain direction of the strip is a consideration in locating the blank when bending operation is required.
ii) Guide bushes and pillars are always hardened
iii) Segmental die construction is preferred over solid one piece construction.
iv) Compound dies are used for close tolerance work parts.
v) Ejectors is essential for U bending die.
vi) Dowels are located diagonally across each other and as a part as possible.
vii) Pilots are always hardened.

b) Explain construction and working of inverted blanking die. **05**

Q.2 a) Part shown in figure is to be produced on progressive die.

i) Draw an economical strip layout. Consider sheet size 300x 1200mm. **06**
ii) Calculate tonnage required for the layout. **04**
iii) Draw the following views of progressive die. **10**
Plan view of bottom assembly and sectional front elevation.

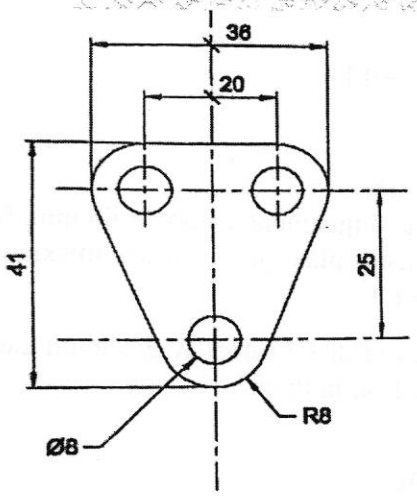

MATERIAL : BRASS SHEET
THICKNESS : 1.6 MM
ALL DIMENSIONS ARE IN MM
ULTIMATE SHEAR STRENGTH : 40 Kg/MM^2
SHEET SIZE: 300MM X 1200MM

Q.3 A) 0.8 mm thick circular cup as shown in figure no. 2 is manufactured by using deep drawing operation. Determine following. **20**

i) Blank size
ii) Percentage reduction
iii) Number of draws
iv) Radius on punches and dies
v) Die clearance, punch diameter and die opening size at each draw

vi) Drawing force and blank holding force
(Yield strength of material : 350 N/mm^2)

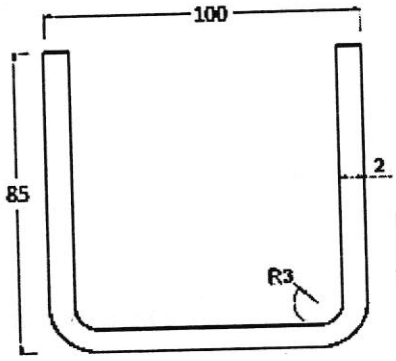

Fig No.2
Deep Drawn Component
(All Dimensions are in mm)

Q.4 A) A press is designed to offer 90 ton of force at 20^0 crank angle with a stroke of 15cm.Stroke is variable from 1cm to 15cm.Calculate tonnage available when ram is 3cm above its BDC. Take stroke length equal to 10cm. **06**

B) Explain various methods of reducing maximum cutting force requirement in a cutting operation. **07**
A 5 mm thick M. S. plate is cut on a shearing machine and length of cut is 550 mm. The shear strength of material is 500N/ sq. mm. find the cutting force requirement with the cutting blade inclined at 2degrees, if the percent penetration is 40%.

C) Explain with the help of neat sketch working of Combination Die. **06**

Q.5 A) Differentiate between the following **(Any two)** :- **10**
I) Coining and embossing
II) Shaving and trimming
III) Hydraulic press and mechanical press

B) A press has minimum DLH of 400 mm and adjustment of ram is 60 mm. Stroke can be varied from 120 mm to 10 mm. If the bolster plate provided has thickness of 70 mm, determine minimum and maximum shut for a die. **05**

C) What is direct pilot? What are advantages of direct pilot? Why should indirect pilot be spring loaded when used on material over 1.6mm thick? **05**

Q.6 Write short note on the following. **20**
a) Methods of reducing spring back in bending.
b) Explain methods of Feeding stock in press.
c) Write safety precautions taken in the press shop.
d) Compound Die

TE | Mech | Sem-VI | Choice Base 3/12/2019

Max. Marks: 80 **Duration: 3 Hrs**

N.B. : 1. **Q. 1 is compulsory.**
2. Solve any **three** from the remaining questions.
3. All question carry equal marks.

Q1 Answer **Any Four** Questions **20**

a) What do you mean by sampling? Explain its advantages.
b) Differentiate between precision and accuracy.
c) Write a note on Nano metrology.
d) Write a note on quality tools.
e) In a limit system, the following limits are specified for a hole and shaft assembly:

$$\text{Hole} = 50^{+0.02}_{+0.00}$$

$$\text{Shaft} = 50^{-0.05}_{-0.08}$$

Determine the (i) tolerance and (ii) allowance with clear explanation.

Q2 a) Explain Gear terminologies and gear errors in detail with diagrams. **10**

b) What is Mechanical comparator? Explain Electrical/Electronic comparator in detail with advantages, applications and limitations. **10**

Q3 a) What is Interferometry? Explain Laser Interferometer with diagram in detail. **10**

b) Explain method of major diameter measurement of internal threads. Also explain minor diameter measurement of internal threads using **10**
i. Taper Parallel and
ii. Rollers.

Q4 a) Enlist various methods for effective diameter measurement of screw thread also derive expression for best wire size. **10**

b) Write classification of gauges and explain Taylors Principle of gauge design. **10**

Q5 a) Explain construction and working of Autocollimator with neat diagram. **10**

b) Explain various SQC tools in detail and write a note on its applications in engineering. **10**

Q6 Answer **Any FOUR** Questions **20**

a) Explain various surface roughness symbols with neat diagram.
b) Write a note on Eddy Current testing methods.
c) Write a note c-chart and u-chart.
d) What is CMM? Explain its various types.
e) Explain role of computers in metrology with suitable examples.

****

76799

TE| mech| Sem-VI| Choice Based

5/12/2019

[Time: 03 Hours] **[Total marks: 80]**

N.B.
1. Question No.1 is compulsory
2. attempt any three out of remaining questions
3. Draw neat sketches to illustrate your answers
4. Figures to the right indicate full marks.
5. Use of **Standard Data Book** is permitted

Q1 Answer any **four** of the following 20

a) What is the necessity of theories of failure? List different theories of failure

b) Explain overhauling and self-locking of screw.

c) What are the assumptions made in analysis of curved beam

d) Explain the nipping of the leaf spring with neat sketch.

e) Explain aesthetic consideration in design with suitable examples.

Q2 a) Design socket and spigot joint for 100kN, which varies from tension to compression. Select suitable material, factor of safety and draw neat sketch. 14

b) Explain Notch sensitivity and Endurance limit related to design of machine elements subjected to variable loads. 06

Q3 a) Design screw, nut, and handle of screw jack to lift a load of 90kN through a height of 400mm. select suitable material and factor of safety to design screw jack. 12

b) Design a helical valve spring for an operating load range of 600N to 1200N. The compression at the maximum load is 30mm. Take the spring index 6 and permissible endurance shear stress for spring material as 480Mpa and yield stress in shear is 960Mpa and G = 80kN/mm^2 08

Q4 a) Design flange coupling to connect the output shaft of an electrical motor to the shaft of centrifugal pump. The motor delivers a power of 20KW at 960rpm. The overall torque for motor is 18% higher of mean torque. 14

b) Define stress concentration and discuss the various methods to reduce the effect of stress concentration. 06

Q5 a) A horizontal nickel steel shaft rests on two bearings, A at the left and B at the right end and carries two gears C and D located at distances of 250 mm and 400 mm respectively from the centre line of the left and right bearings. The pitch diameter of the gear C is 600 mm and that of gear D is 200 mm. The distance between the centre line of the bearings is 2400 mm. The shaft transmits 20 kW at 120 r.p.m. The power is delivered to the shaft at gear C and is taken out at gear D in such a manner that the tooth pressure F_{tC} of the gear C and F_{tD} of the gear D act vertically downwards. Find the diameter of the shaft, if the working stress is 100 MPa in tension and 56 MPa in shear. The gears C and D weighs 950 N and 350 N respectively. The combined shock and fatigue factors for bending and torsion may be taken as 1.5 and 1.2 respectively. 14

b) What is preferred number? Explain use of preferred number in engineering design? 06

Q6 a) Select suitable standard hook for the lifting load of 110kN of trapezoidal cross section and find the stress induced at the most critical cross section of the hook. 12

b) A rectangular steel plate is welded as a cantilever to a vertical column and supports a single concentrated load P, as shown in Figure. Determine the weld size if shear stress in the same is not to exceed 140 MPa. 08

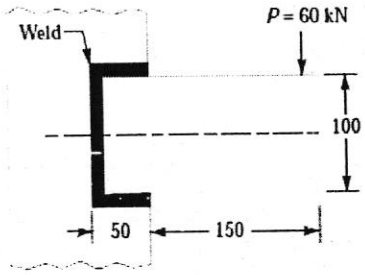

****

T.E (Mechanical Engg) Sem-VI Choice Base 12/12/2019

(Time: 3 Hours) (Total Marks: 80)

N.B.

1. **Question no.1 is compulsory.**
2. Attempt any ***three*** from question no. **2 to 6.**
3. Use of Refrigerant Charts/Tables, Psychrometric charts, friction charts and steam tables are permitted

Q1) Attempt any ***four***

a) What are primary and secondary refrigerants? Explain the use of secondary refrigerant in Ice manufacturing plant. **05**

b) What all can you do to make your building a GREEN BUILDING? **05**

c) Why was the refrigeration and air conditioning regarded luxurious in the olden days? Is it luxurious now a days? Explain with examples in support of your arguments. **05**

d) Describe briefly the working principle of a Vortex Tube Refrigeration **05**

e) Explain the terms ODP & GWP. What are India`s commitments in the Montreal Protocol? **05**

Q2) a) Discuss the effect of evaporator and condenser pressure on standard vapour compression system using p-h chart. **08**

b) The following data refer to a simple aircraft refrigeration system: **12**

Ram Air temperature and pressure	: 30°C and 1 atm
Cabin air temperature and pressure	: 27°C and 1 atm
Pressure at the exit of main compressor	: 4.5 bar
ε = Heat Exchanger effectiveness cooling	: 0.8, η_c= 0.84, η_e=0.8
Load = 21kW	

Determine a) Tonnage, b) mass of air bled from main compressor for refrigeration, c) heat rejection, d) power, e) COP and f) power supplied to the blower.

Q3) a) A refrigeration system of 10TR capacity at an evaporator temperature of -12°C, needs a condenser temperature of 28°C. The refrigerant NH_3 is subcooled by 5°C before entering the expansion valve. The vapour is 0.95 dry when it leaves the evaporator. Using p-h chart for NH_3, find: **10**

1. Condition of vapour at the outlet of compressor
2. Condition of vapour at the entrance of evaporator
3. C.O.P.
4. Power Required

b) Derive the expression for equivalent diameter of a circular duct for a rectangular duct, when the quantity of air passing through the rectangular and circular duct is same. **10**

81498

Q4) a) Explain with schematic the working of Lithium-Bromide Water refrigeration system. 10

b) Moist air at 30°C, 1.01325 bar has a relative humidity of 80%. Determine without using psychrometric chart. 10

1. Partial pressure of water vapour and air
2. Specific humidity
3. Specific volume and
4. Dew Point Temperature

Q5) a) An air conditioned auditorium is to be maintained at 27°C dry bulb temperature and 60% RH. The ambient condition is 40°C dry bulb temperature and 30°C wet bulb temperature. The total sensible heat load is 100000KJ/h and the total latent heat load is 40000kJ/h. 60% of the return air is recirculated and mixed with 40% of make-up air after the cooling coil. The condition of air leaving the cooling coil is at 18°C. 10

Determine:

1. Room sensible heat factor
2. The condition of air entering the auditorium
3. The amount of make-up air
4. Apparatus dew point
5. BPF of cooling coil

Show the process on the psychrometric chart.

b) Explain the condition of human comfort. What are the factors effecting human comfort? 06

c) Explain different types of Expansion devices 04

Q6) Write short notes on *any four* 20

a) Packaged Air Conditioners

b) Recent developments in variable refrigerant flow systems

c) Recent substitutes for refrigerants

d) Performance assessment parameters for cooling towers

e) BEE Star rating program

----------x----------

81498

F3028E6590CFB6C7ECE525AA0A24AC2C

20/12/2019

Paper / Subject Code: 89027 / Elective - II Industrial Automation

T. E (Mech) Sem-VI Choice Based Dec-2019

(3 Hours)

N.B.:

1. **Question No.1 is compulsory.**
2. Attempt any **three** questions out of remaining **five** questions.
3. Figures to right indicate full marks.
4. Assume suitable data if **necessary**.

Q1 a. Name the three basic elements of automated systems. Explain same in detail. 8

b. Differentiate between pneumatic and hydraulic systems. 6

c. Write short note on end effectors used in robots. 6

Q2 a. Design simple pneumatic circuit for tow cylinder operation with following sequence using 4/2 pilot operated valve as DCV. 10

A+ B+ Delay A- B-

With user selection option single cycle & Multicycle operation. Draw displacement time diagram

b. List the different sensors bases on low, medium and high pressure measurement. Explain any two in detail. 10

Q3 a. 12

Design PLC Ladder diagram for following process details

Problem Description -

When a part is placed on the conveyor at position 1, and when a start button is pressed it moves to position 2. Upon reaching position 2, it stops for the stamping operation to take place. After stamping it automatically moves to position 3. It stops at position 3, where the part is removed manually from the conveyor. Assume only one part is on the conveyor at a time. Add limit switches, interlocks, push buttons, etc. as required.

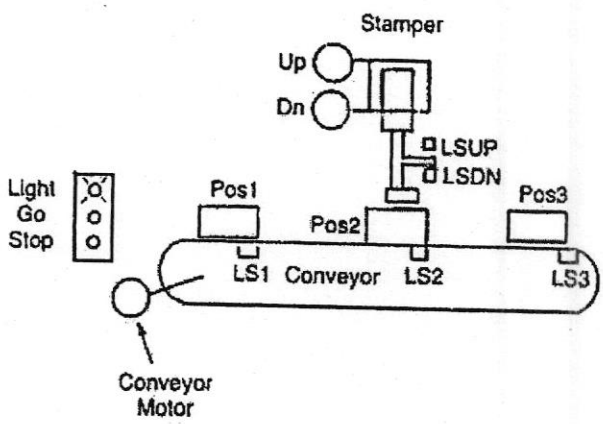

b. Explain in detail two industrial applications of robots. 8

Q4	a.	Explain PLC architecture in detail.	7
	b.	What are AGVs? Explain any two technologies used in AGVs	7
	c.	Write short note on FRL Unit used in Pneumatics systems.	6
Q5	a.	Design electro pneumatic circuit for three cylinder operation with following sequence using 5/2 both side solenoid operated valve as DCV. (AB)+ Delay A- C+ C- B- With user selection option single cycle & Multicycle operation.	12
	b.	Explain in detail reasons for automating a system.	8
Q6	a.	Write short note on Geneva mechanism.	7
	b.	Explain criteria of selection of actuators in detail.	7
	c.	Differentiate between Mechanization & automation	6

****

BE(MECH) (VII) (Choice Base) 14/11/2019

(Time: 3 Hours) Marks: 80

N.B. 1) **Question No. 1 is compulsory**
2) Solve **Any Three** from remaining **Five** questions.
3) Use of standard data book is permitted
4) Assume suitable data if necessary, giving justification

Q1 Answer any **Four** from the following

a) What is meant by bevel gear factor? Explain the terms in the expression of bevel gear factor? **5**

b) Explain the importance of hunting tooth in gear trains? **5**

c) Why is pre loading required in anti-friction? Give example of applications of pre-loaded bearings? **5**

d) How does lubrication help in preventing gear failure? **5**

e) Explain the terms coefficient of speed fluctuation and coefficient of steadiness? **5**

Q2 a) A rotary disc cam and central translator follower has following motion:-
Forward stroke = 30 mm in 100° rotation of cam with Parabolic motion and Return stroke = 30 mm with SHM in 90° of cam rotation remaining dwell for the remaining period.
Mass of follower is 1.5 Kg and cam shaft rotates at 650 rpm and maximum pressure angle is 25° during forward stoke. The external force is 200 N during forward stroke and 50 N during return stroke.
Determine
1. Design the cam, the roller follower along with its pin and spring **12**
2. Calculate maximum cam shaft torque. **03**

Q2 b) State assumptions made in Beam strength equation? **05**

Q3 a) A V- belt drive is required for a 15KW, 1440rpm electric motor, which drives a centrifugal pump running at 360 rpm for a service of 24 hr per day. From space considerations, the centre distance should be approximately 1 m. Determine
1. Belt specification **3**
2. Number of belts **3**
3. Correct centre distance **2**

Q3 b) Design a CI flywheel for four stroke IC engine developing 50 HP at 300 rpm. The total fluctuation of speed is limited to 3% of mean speed. The work done during power stroke is 30% more than the average work done during the whole cycle. Find the diameter of shaft supporting the flywheel. **12**

979B3B8DC5D9603B1FF8DD6A3A7C8FDB

Q4 a) A pair of parallel helical gears consists of 20 teeth pinion meshing with a 100 teeth gear. The pinion rotates at 720rpm. The normal pressure angle is 20° while the helix angle is 25°. The face width is 40 mm and normal module is 4mm. The pinion and gear is made up of plain carbon steel with ultimate tensile strength of 600 N/mm^2 and heat treated to surface hardness of 300 BHN. Calculate power transmitting capacity based on strength and wear for service factor of 1.5 **12**

Q4 b) An angular contact ball bearing is used for worm gear shaft to support a radial load of 8 KN and 4.5KN along the axial direction. The shaft rotates at 30 rpm. Select suitable size of bearing if it is required to have a life of 30000 hrs with a probability of survival of 92% **08**

Q5 a) A worm reduction unit is required to transmit 15KW power from an electric motor operating at1440 rpm. The output speed is 75 rpm and the load is mild shock, normal duty.

i) Selecting suitable material and stresses design worm and worm wheel for strength and wear. **8**

ii) Check the unit for heat dissipation capacity and modify the dimensions if necessary **7**

Q5 b) Why clutches are usually designed on the basis of uniform wear? **5**

Q6 a) A 180 ° hydro dynamically lubricated journal bearing supports a radial load of 10 KN when operating at 750 rpm for an air blower. The radius to radial clearance is 1000 and SAE 20 oil is used for lubrication. Design the bearing and check its operating parameters like oil flow rate, Temperature, Bearing surface temperature, Coefficient of friction and frictional power loss. **15**

Q6 b) Why are ball and roller bearings called 'antifriction' bearing **5**

****

979B3B8DC5D9603B1FF8DD6A3A7C8FDB

B E (VII) (Mech.) (Choice Based) 18/11/19

[3 Hours] [Total Marks : 80]

Note:

1. **Question 1 is Compulsory**
2. Solve any three from remaining five
3. Figures to right indicate full marks
4. Assume suitable data if necessary

Question No.		Max. Marks
Q.1	Explain any **Four**:	20
	a) Feature based modeling technique used for 3D modeling.	
	b) Procedure of creating scripts for API.	
	c) Turning Canned Cycle.	
	d) CIM tools used with reference to a manufacturing industry.	
	e) Application of RP in Science and Medicine.	
Q.2	a) Explain Cohen-Sutherland Clipping Algorithm.	10
	b) A triangle with vertices A (1 , 1) , B(2 ,1) and C (2 , 3) has to be rotated by 30° counter clockwise about a point P (3 , 2). Determine the composite transformation matrix and the new coordinates of the triangle.	10
Q.3	a) Plot a Bezier curve having control points as P_0 (1, 2), P_1 (3, 4), P_2 (6, -6) and P_3 (10, 8). Take a step size of 0.2. Also find the midpoint of the curve.	10
	b) Explain Fused Deposition Modelling with its advantages, disadvantages and application.	10
Q.4	a) Find the transformed coordinates when a line (3, 4 , 1), (4 , 2, 2) is rotated about Z axis by an angle of 45° in anticlockwise direction.	10
	b) Differentiate between	
	i) SLA and SLS	10
	ii) Absolute and Incremental programming	

Q.5 a) Explain the need of CIM and its database requirements. 10

b) Write a CNC part program using G and M codes for contouring a component of thickness 10mm. Also drill holes of 16mm diameter as shown in figure. Assume cutter speed as 15m/min and feedrate as 0.2 mm/rev. 10

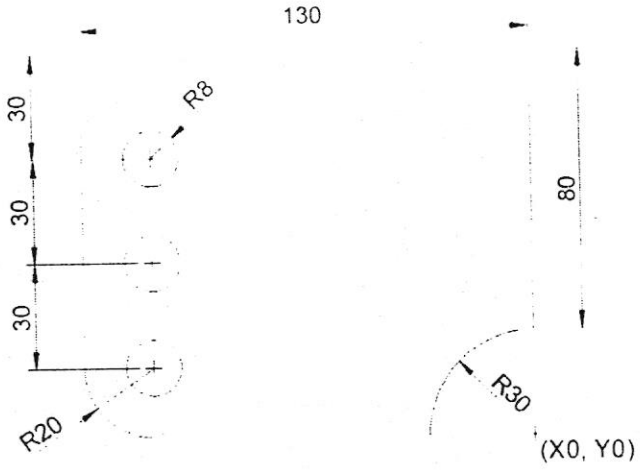

Q.6 Write short note on: 20

a) Window to Viewport Mapping

b) Artificial Intelligence in Design and Manufacturing

c) Fixture Component Technology

d) Parameter Optimization

Paper / Subject Code: 42853 / Production Planning and Control

BE Sem: VII Mech. (Choice Based) 20/11/19

Three Hours

Total Marks: 80

Instructions:

- **Question No. 1 is compulsory**
- All questions carry **equal** marks
- Assume suitable data wherever **necessary**
- Explain with figures and diagrams wherever necessary
- Figures to the right indicate full marks.
- Answers to the questions should be grouped and written together.

Q.1 Explain in brief. **(Any Four)** **20**

a) Discuss the prerequisites of PPC
b) State the assumptions in job sequencing
c) State the objectives and inputs to the MRP system
d) Fixed quantity system (Q-system)
e) Measures of capacity
f) Assembly Line Balancing

Q.2 a. The Handy-Dandy Department Store had forecast sales of Rs.110000 for the last week. The actual sales turned out to be Rs.125000. **10**

i) What is the forecast for this week, using exponential smoothing?
Assume $\alpha = 0.1$
ii) If sales this week turn out to be Rs.120000, what is the forecast for the next week?

b. A firm produces wheel barrows is expected to deliver 40 wheel barrows in week 1 ,60 in week 4, 60 in week 6 and 50 in week 8 .Among the requirements for each wheel barrow are two handle bars, a wheel assembly and one tire for the wheel assembly. Order quantities, lead times and inventories on hand at the beginning of period 1 are shown in table **10**

Part	Order Quantity	Lead Time	Inventory on Hand
Handle bars	300	2 weeks	100
Wheel Assembly	200	3 weeks	220
Tires	400	1 week	50

Draw product structure and complete the MRP for handle bars, wheel assembly and tires.

Q.3 a. The following table shows the details of a project involving 11 activities. **10**

Activity	Predecessor	Duration (weeks)		
		t_o	t_m	t_p
A	---	6	7	8
B	---	1	2	9
C	---	1	4	7
D	A	1	2	3
E	A,B	1	2	9
F	C	1	5	9
G	C	2	2	8
H	E, F	4	4	4
I	E, F	4	4	10
J	D, H	2	5	14
K	I, G	2	2	8

i) Construct the project network
ii) Find the expected duration and variance
iii) Find the critical path and expected project completion time
iv) What is the probability of completing the project on or before 25 weeks?

b. Why is it important to monitor and control forecasts? **10**
What is aggregate planning? Explain different strategies of aggregate planning?

Q.4 a. A company currently purchases one of its items for Rs.2 per unit without quantity discount. The ordering cost is Rs.20 per order and the carrying cost is 20% of its purchase price per unit per year. The annual demand is 2500 units. A new vendor offers quantity discounts for the same item as per the following quantity discount scheme. Find the best order quantity. **10**

Quantity	Discount per unit
$0 \le Q_1 < 1500$	No discount
$1500 \le Q_2 < 2500$	3 % of per unit price
$2500 \le Q_3$	5 % of per unit price

b. Define project scheduling. Explain importance of scheduling in project planning. Differentiate between CPM and PERT. **10**

Q.5 a. There are seven jobs, each of which has to be processed on machine A and on machine B (order of machining is AB). Processing time is in hours. Find the optimal sequence in which the jobs are to be processed so as to minimize the total time elapsed. **10**

Job →	1	2	3	4	5	6	7
M/c A (Time in Hours)	3	12	15	6	10	11	9
M/c B (Time in Hours)	8	10	10	6	12	1	3

b. Use the sales data given below to determine: **10**
i) the least squares trend line, and
ii) the predicted value for 2019 sales.

Year	2012	2013	2014	2015	2016	2017	2018
Sales(units)	100	110	122	130	139	152	164

Q.6 a. The precedence diagram for assembly activities A to G is shown below. The element times required for the activities are shown in the diagram in minutes. The line operates for seven hours per day and an output of 550 units per day is desired. **10**

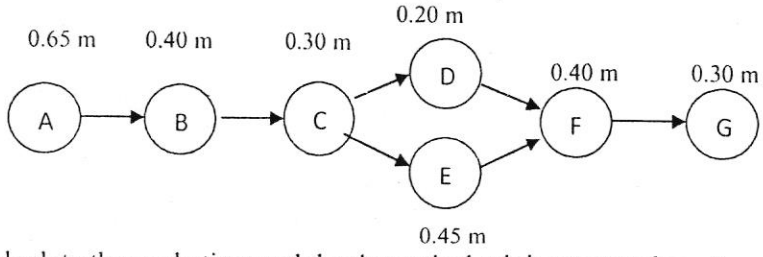

i) Calculate the cycle time and the theoretical minimum number of workers.
ii) Group the tasks into an appropriate number of work stations by Kilbridge and Westers Method.
iii) Also calculate the balanced efficiency.

b. Explain the evolution of ERP. What is the purpose of modeling an enterprise? **10**

******

Paper / Subject Code: 42855 / Automobile Engineering (DLOC - III)

22/11/19.

B.E./SEM VII/ MECH/ Choice Base

(3Hrs) 80 Marks

N.B.: (1) Question No. 1 is compulsory.
(2) Attempt any 3 questions out of 5 questions.
(3) Figures to the right indicate full marks.
(4) Illustrate your answers with sketches wherever necessary.

Q.1 Attempt **any four** from following six questions

a) Explain the requirements of Clutches. 20
b) Explain the working of differential with sketch. 05
c) Explain the difference between sprung and un-sprung mass. 05
d) Explain various battery ratings. 05
e) Explain the importance of body design. 05
f) Explain what do you mean by adaptive cruise control. 05

Q.2

a) Explain synchromesh gearbox with sketch. 20
b) Explain types of universal joint in detail. 10

Q.3

a) Explain steering geometry in detail. 20
b) Explain air suspension and its feature in detail. 10

Q.4

a) Explain types of live axle with sketches. 20
b) Explain different brake actuation methods. 10
c) Explain overdrive. 05

Q.5

a) Explain the working of lead acid battery with neat sketch. 20
b) Explain reversibility of steering gears. 10
c) Explain working of combine current and voltage regulator. 05

Q.6 Attempt any four from following six questions

a) Explain the working of electronic brake distribution with neat sketch. 20
b) Explain open, semi-integral and integral structure with neat sketch. 05
c) Explain bendix drive in detail. 05
d) Explain principle operation of dynamometer in detail with diagram. 05
e) Explain different types of tyres. 05
f) Explain the difference between disc and drum brake. 05

****

76827

 26/11/2019

B.E / Mech / choice based / Sem - VII -

3 Hours **Total: 80 marks**

N.B: (1) Question no 1 is compulsory
(2) Attempt any **three** out of remaining **five** questions
(3) Figures to the right indicate full marks
(4) Assume Suitable data if necessary
(5) Notations carry usual meaning

Q.1 Answer **any four** of the following questions:

a)Write the dual of the following LPP
Maximise Z= $4x_1 + 2x_2$
Subject to ,
$x_1 - 2x_2 \geq 2$
$x_1 + 2x_2 = 8$
$x_1 - x_2 \leq 10$
Where $x_1 \geq 0, x_2$ is unrestricted in sign. **(05)**
b)What are assumptions made in game theory **(05)**
c) Write short note on special cases in Linear Programming Problem. **(05)**
d) Enlist assumptions in sequencing problem. **(05)**
e) Briefly explain Monte Carlo simulation with suitable example. **(05)**

Q.2 a) Solve by Simplex Method:

Maximize Z=$3x_1 + 2x_2$
Subject to
$x_1 + x_2 \leq 4,$
$x_1 - x_2 \leq 2$
Where $x_1, x_2 \geq 0$ **(10)**

b) Workers come to tool store room to receive special tools (required by them) for accomplishing a particular project assigned to them. The average time between two arrivals is 60 seconds and the arrivals are assumed to be in Poisson distribution. The average service time (of tool room attendant) is 40 seconds. Determine

1) Average queue length
2) Average length of non empty queue
3) Average number of workers in system
4) Mean waiting time of an arrival
5) Average waiting time of an arrival (worker) who waits. **(10)**

Q.3 a) Solve the following by Vogel's Approximation Method (VAM) and find optimal transportation plan. **(10)**

	D_1	D_2	D_3	D_4	Supply
S_1	19	30	50	10	7
S_2	70	30	40	60	9
S_3	40	8	70	20	18
Demand	5	8	7	14	

b) Iyengar Bakery keeps stock of a popular brand of cake. Previous experience indicates the daily demand as given here: **(10)**

Daily Demand	0	10	20	30	40	50
Probability	0.01	0.20	0.15	0.50	0.12	0.02

Consider the following sequence of random numbers:
48,78,19,51,56,77,15,14,68,09

Using this sequence simulate the demand for the next 10 days. Find out the stock situation if the owner of the bakery decided to make 30 cakes every day. Also estimate the daily average demand for this cake on the basis of simulated data.

Q.4 a) Solve the following Assignment Problem. **(10)**

Contractors	**Cost of Repairs (Rs.in Lakhs) of Roads**			
	R_1	**R_2**	**R_3**	**R_4**
C_1	9	14	19	15
C_2	9	17	20	19
C_3	9	18	21	18
C_4	10	12	18	19
C_5	10	15	21	16

Rs.50 Lakhs is total cost of repair.

1) Find the best way of assigning the repair work to the contractors and cost.
2) If it is necessary to seek supplementary grants, then what should be the amount?
3) Which of the 5 contractors will be unsuccessful in his bid?

b) A distance network consists of eleven nodes which are distributed as shown in following table. Find the shortest path from node 1 to node 11 using dynamic programming. The corresponding distance are: **(10)**

Arc	**Distance**	**Arc**	**Distance**
1-2	8	5-8	12
1-3	7	5-9	7
1-4	1	6-9	9
2-5	5	7-9	6
3-5	9	7-10	13
3-6	2	8-11	4
3-7	8	9-11	2
4-7	10	10-11	15

D1F9F7C36E6E62DC420FF76DB78AB5B4

Q.5 a) A and B play a game in which each has three coins a 5p,a 10p and 20p.Each player selects a coin without the knowledge of the others choice. If the sum of the coin is an odd amount, A wins B's coin; if the sum is even, B wins A's coin. Find the best strategy for each player and the value of the game. **(10)**

b)Solve by **Big-M or Charne's Penalty Method** **(10)**

Maximize $Z=4x_1 + x_2$

Subject to $3x_1 + x_2 = 3$

$4x_1 + 3x_2 \geq 6$

$x_1 + 2x_2 \leq 4$

Where $x_1, x_2 \geq 0$

Q.6 a) A book binder has one printing press, one binding machine and the manuscript of number of different books. The time required to perform the printing and binding operation for each book are given below. Determine the order in which book should be processed, in order to minimise the total time required to turn out all the books. Also find the idle time of binding machine. **(10)**

Books	**1**	**2**	**3**	**4**	**5**	**6**
Printing time (hr)	30	120	50	20	90	110
Binding time (hr)	80	100	90	60	30	10

b) Mini Computer Company purchases a component of which it has a steady usage of 1000 units per year. The ordering cost is Rs.50 per order. The estimated cost of money invested is 25% per year. The unit cost of the component is Rs.40.Calculate the optimal ordering policy and total cost of inventory system, including purchase cost of the components. If the component supplier agrees to offer price discounts of minimum lot supplies as per schedule given below, reassess the decision on optimal ordering policy and total cost. **(10)**

Lot size	**Price**
Upto 149	Rs.40
150-499	Rs.39
500 or More	Rs.38

----------The End----------

D1F9F7C36E6E62DC420FF76DB78AB5B4

BE | Mech | CBSGS | Sem-VIII 4/12/2019

Time: 3 Hours **Marks: 80**

- Question No. 1 is compulsory.
- Attempt any three questions from the remaining.
- Assumption made should be clearly stated.
- Design Data Book by PSG, Mahadevan, Kale & Khandare are permitted to use.

Q.1 **Answer any four**

(a) State the importance of Ray Diagram in the design of multi speed gear box. 5

(b) Describe the significance of the pulleys for a gain in force and pulleys for a gain in speed. 5

(c) State the importance of the take up arrangements in the belt conveyor system, also explain the gravity take up unit with neat sketch. 5

(d) Draw a flow chart for the morphology of design and explain each phase. 5

(e) Describe the terms NPSH required and NPSH available associated with centrifugal pump design. 5

Q.2 It is required to design a 2 X 3 multi speed gear box for a lathe machine operation with following specification.
N_{min} = 120 rpm, N_{motor} = 1500 rpm, GP ratio = 1.41

a) Write structural formulae and draw structural diagrams, 5

b) Draw ray diagram and speed chart 5

c) Find the number of teeth of each gear. 5

d) Draw the deviation chart. 5

Q.3 A single cylinder, two stroke, and water cooled diesel engine is required to develop 20KW at a speed of 1500rpm. Assume the compression ratio as 12.

a) Find the standard bore and length of a cylinder. 4

b) Estimate the cylinder liner thickness also check for pressure and thermal criteria. 4

c) Estimate the cylinder head dimensions and water jacket thickness. 4

d) Select suitable size and number of bolts for the cylinder head. 4

e) Estimate the crown thickness of the piston. 4

Q.4 For the specification of an EOT Crane ,

Application - Class II

Load to be Lifted - 15 tonne

Hoisting speed - 5 m/min

Maximum Lift - 6 m

a) Design a 6 X 37 type of rope and find its life in months. 5

b) Select suitable standard sheave and design axle. 5

c) Select suitable hook and check at critical cross section. 8

d) Select standard thrust bearing for the hook. 2

Q.5 (a) Derive an expression for the breaking strength of 6 X 7 type of rope used in hoisting application. 5

(b) Belt conveyor system is to be designed for the following specifications: 15

Material conveyed up : Coal

Capacity : 200 TPH

Horizontal distance : 30m

Vertical distance :5m

Troughing angle : 20 degree

i. Estimate the width of the belt based on capacity.

ii. Estimate the motor power.

iii. Find the number of ply in the belt cross section.

Q.6 (a) State the causes and remedies for the vibration and noise in centrifugal pump. 5

(b) Illustrate the working of the external gear pump with neat sketches. 5

(c) A Gear Pump required to deliver 25LPM of SAE20 oil at a pressure of 25 bar. Efficiency of the gear pump is 80%. 10

i. Select suitable standard motor.

ii. Design gear and check for bending failure.

BE | Mech | Sem - VIII | CBSGS 9/12/2019

(3 Hours) Total Marks: 80

N.B. 1) Question No.1 is compulsory.
2) Attempt any three questions out of the remaining five questions.
3) Figures to the right indicate full marks.
4) Assume suitable data wherever required but justify the same.

Q.1 Attempt any four.

a. Principles of motion economy (5)

b. Different techniques of Industrial Engineering (5)

c. Factors influencing Plant Layout (5)

d. What do you mean by Incentive Scheme? List its different types? (5)

e. Different methods of depreciations. (5)

Q.2a. What is the difference between Value Engineering and Value Analysis? What are the steps involved in it? Explain with the help of an example. (10)

b. Define productivity. What are the factors influencing productivity? (10)

Q.3.a. Explain the following charts with the help of a suitable example. (10)
i) Flow Process Chart
ii) Multiple Activity Chart

b. What is the importance of Material Handling? Which factors need to be considered for the selection of material handling equipment? (10)

Q.4.a An operation involves the following elements given below with their related data, (10)

Element	Observed time (minutes)	Rating	Remarks
A	0.20	90	-
B	0.05	80	-
C	0.03	100	-
D	0.78	100	-
E	0.06	100	-
F	0.05	100	-
G	0.02	85	Once in 5 pieces
H	0.06	80	-
I	0.10	90	-
J	0.04	90	Once in 20 pieces

Assuming rest and personal allowances as 13% and contingency allowance as 2%, calculate standard time of the job.

b. What is the importance of Facility Location? Which factors are controlling it? **(10)**

Q.5. a. Why does money have a time value? Explain the basic time value of money model with four variables involved in it. **(10)**

b. What do you mean by Ergonomics? What are the different types of Displays and Controls? **(10)**

Q.6. Write short notes on **(Any Four)**

a. Job Evaluation **(5)**

b. Line Balancing **(5)**

c. MOST **(5)**

d. Financial Statements **(5)**

e. BPR **(5)**

****

B.E. (Mech) Sem-VIII CBSGS 13/12/2019 **Q. P. Code : 50645**

Time : 3 hours **Marks : 80**

N. B. 1) Question No. 1 is compulsory
2) Attempt any three questions out of remaining five questions
3) Figures to right indicate full marks
4) Assume suitable data if necessary

Q. 1. Write short note on any four 20
a) Define Solar Constant, Air Mass, Solar Altitude Angle, Angle of Incidence
b) Wind Energy Site Selection
c) Energy Audit
d) Energy Plantation
e) Classification of Energy Sources

Q. 2. a) Calculate Solar altitude angle, incident angle and collector efficiency if: 10
Location, Pune : (18^0 32'N, 73^0 51'E)
Day and Time: May 15, 11A.M.
Annual average intensity of solar radiation 400 W/m^2
Collector tilt: Latitude angle
No. of glass covers: 2
Heat removal factor: 0.85
Transmittance of glass: 0.88
Absorptance of glass: 0.90
Top loss coefficient: 7 $W/m^2\ ^0C$
Collector fluid temperature: 73^0C
Ambient temperature: 28^0C
Diffusive reflectance for two covers: 0.24

Q. 2 b) Explain the construction details and working of KVIC biogas digester 10

Q. 3. a) Explain the techniques suggested for maintaining the Biogas production. 10

Q. 3. b) Estimate monthly average total daily radiation on FPC facing south, at Mumbai (19^0 07'N, 72^0 51'E) during the month of March, if the average sunshine hours per day is 9.5. Assume the value of a = 0.31 and b = 0.43 10

Q. 4. a) State various parameters which affects performance of solar collectors 04

Q. 4. b) What is wave energy? Explain any one wave energy conversion system 06

Q. 4. c) Calculate the number of animals and volume of biodigester required to produce power for household which has power requirement of 0.8 KW for lighting and cooking purpose. 10
Take C.V. of methane 28 MJ/m^3
Burner efficiency: 65%
Retention period: 25 days
Dry matter per animal per day is 1.8 kg
Density of dry matter in slurry in digester is 50 kg/m^3
Biogas yield is 0.3 m^3 per kg of dry input
Methane proportion in biogas is 0.7

Q. P. Code : 50645

Q. 5. a)	State and explain design considerations in Wind turbine design	08
Q. 5. b)	Describe 'Closed Cycle' OTEC system with its advantages over 'Open Cycle' system.	06
Q. 5. c)	State the advantages and disadvantages of geothermal energy	06
Q. 6.	Write short note on any Four a) Small head hydro power development b) Application of Wind Energy c) Producer Gas d) Total Energy Conversion e) Fuel Cell	20

****

Paper / Subject Code: 53309 / 6)Automobile Engineering

B.E. (Mech) Sem-VIII CBSGS 13/12/2019

Time: 3 Hours Marks 80

N.B.

1. Question No.1 is compulsory
2. attempt any three out of remaining questions
3. Draw neat sketches to illustrate your answers
4. Figures to the right indicate full marks.

Q1 With the help of neat sketch explain in brief 20
a) Hotchkiss drive
b) Master cylinder
c) coil spring front suspensions system
d) Alkaline battery

Q2 a) Explain in brief, the requirements of body structural system for road vehicle and describe lightweight materials for automobile application. 10
b) Differentiate between fluid flywheel and torque convertor. Describe any one type of live (rear) axle. 10

Q3 Write Short note on the following 20
a) Disc Brake
b) Necessity of a gearbox
c) factors affecting tyre life
d) battery ratings

Q4 a) Enlist the sensors used in modern automobiles with their functions in brief. 10
b) Write short note and compare the semi integral and integral structures and state application. 10

Q5 a) Explain the construction, working, advantages and disadvantages of multi plate dry friction clutch. 10
b) What are the objectives of suspension? Describe telescopic type shock absorber. 10

Q6 a) Explain Anti-locking braking system and tandem master cylinder. 10
b) Discuss three modern trends in automobiles with their features and advantages. 10

****

76951